# AC-DC Switching Power Module
# CBM70S SERIES
# APPLICATION NOTE

## Approved By:

| Department | Approved By | Checked By | Written By |
|---|---|---|---|
| Research and Development Department | Enoch | Wei-Cheng | Horard |
| | | Ovid | |
| Quality Assurance Department | Ryan | Benny | |

# Contents

1. Introduction ..... 3
2. Pin Function Description ..... 3
3. Electrical Block Diagram ..... 3
4. Test Set-Up ..... 4
5. Installation Instruction ..... 4
6. Features and Functions ..... 4
*6.1 Over Current Protection ..... 4*
*6.2 Over Voltage Protection ..... 4*
*6.3 Over Temperature Protection ..... 4*
*6.4 Output Voltage Adjustment ..... 5*
7. Input / Output Considerations ..... 6
*7.1 Output Ripple and Noise Measurement ..... 6*
8. Thermal Design ..... 7
*8.1 Operating Temperature Range ..... 7*
*8.2 Convection Requirements for Cooling ..... 7*
*8.3 Thermal Considerations ..... 7*
*8.4 Power Derating8 ..... 7*
*8.5 Half Brick Heat Sinks ..... 9*
9. Packing Information ..... 10

# CBM70S Series
# Application Note V12

## 1. Introduction

This application note describes the features and functions of Cincon's CBM70S series, switching AC-DC power module. These are highly efficient, reliable, compact, high power density, single output AC/DC power modules. The module is fully protected against short circuit and over-voltage conditions. Cincon's world class automated manufacturing methods, together with an extensive testing and qualification program, ensure that the CBM70S series power module is extremely reliable.

## 2. Pin Function Description

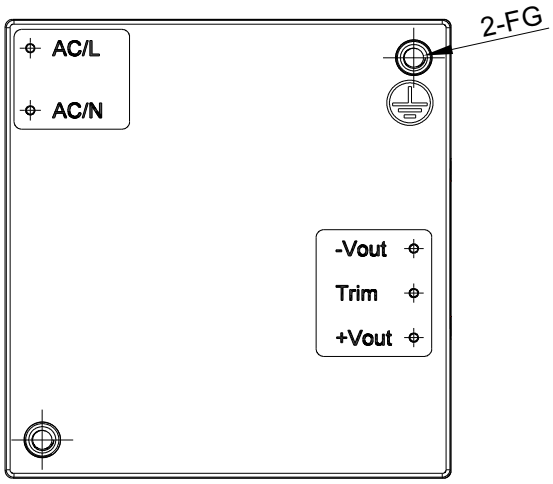


| No | Label | Function | Description |
|---|---|---|---|
| 1 | AC/L | AC Line | Positive Supply Input |
| 2 | AC/N | AC Neutral | Negative Supply Input |
| 3 | +Vout | +V Output | Positive Power Output |
| 4 | Trim | Trim | External Output Voltage Adjustment |
| 5 | -Vout | -V Output | Negative Power Output |
| -- | -- | Mounting Insert | Mounting Insert (FG) |

Note: Base plate can be connected to FG through M3 threaded mounting insert. Recommended torque 3Kgf-cm.

## 3. Electrical Block Diagram

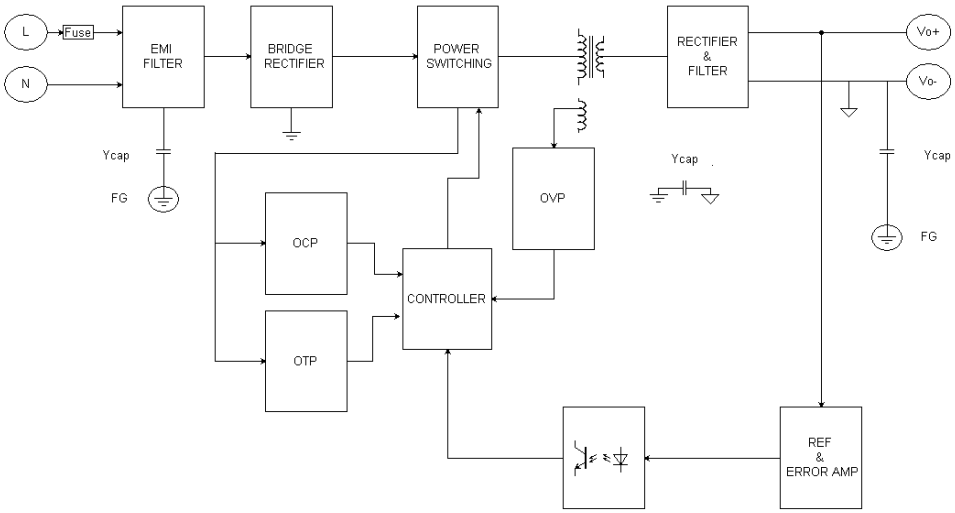

## 4. Test Set-Up

The basic test set-up to measure parameters such as efficiency and load regulation is shown in Figure 1. When testing the Cincon's CBM70S series under any transient conditions, please ensure that the transient response of the source is sufficient to power the equipment under test. We can calculate:

- Efficiency
- Load regulation and line regulation.

The value of efficiency is defined as:

$$\eta = \frac{V_o \times I_o}{V_{in} \times I_{in}} \times 100\%$$

Where:

$V_o$ is output voltage,

$I_o$ is output current,

$V_{in}$ is input voltage,

$I_{in}$ is input current.

The value of load regulation is defined as:

$$Load\ reg. = \frac{V_1 - V_2}{V_2} \times 100\%$$

Where:

$V_1$ is the output voltage at 60% load.

$V_2$ is the output voltage at 60%±40% load.

The value of line regulation is defined as:

$$Line\ reg. = \frac{V_{HL} - V_{LL}}{V_{LL}} \times 100\%$$

Where:

$V_{HL}$ is the output voltage of maximum input voltage at full load.

$V_{LL}$ is the output voltage of minimum input voltage at full load.

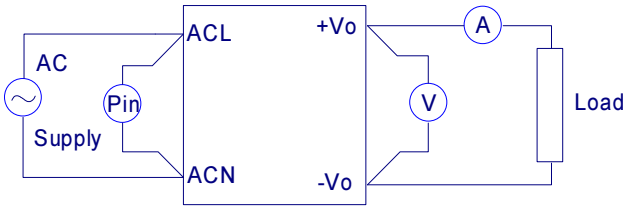


Figure 1. CBM70S Series Test Setup

## 5. Installation Instruction

The CBM70S mounting holes are 1.5mm. Please allow 4mm side clearance from the components and all side of the PCB and CASE. Allow 5mm clearance above the highest parts on the PCB and CASE.

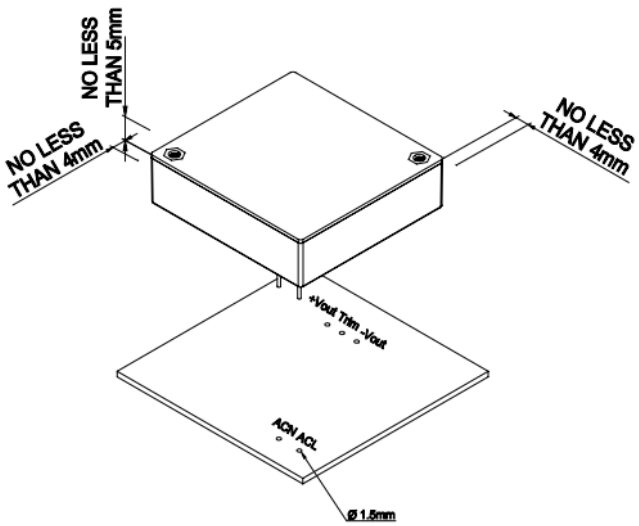


## 6. Features and Functions

### *6.1* Over Current Protection

All models have internal over current and continuous short circuit protection. The unit operates normally once the fault condition is removed. At the point of current limit inception, the converter will go into hiccup mode protection.

### *6.2* Over Voltage Protection

All different voltage models have a fully continuous over voltage protection. The power module will supply OVP.In the event of happen the OVP, the converter will shut down, the converter will go into hiccup mode protection.

### *6.3* Over Temperature Protection

These modules have an over temperature protection circuit to safeguard against thermal damage. Shutdown occurs with the maximum case reference temperature is exceeded. The module will restart when the case temperature falls below over temperature recovery threshold. Please measure case temperature of the center part of aluminum base plate.

### *6.4 Output Voltage Adjustment*

Output may be externally trimmed (-10% to +10%) with a fixed resistor. Po≦max rated power, Io≦Io_max.

Trim up/down is extra features，changing the output voltage will cause some electrical properties to be substandard.

EX:

Output voltage ±1%,etc.

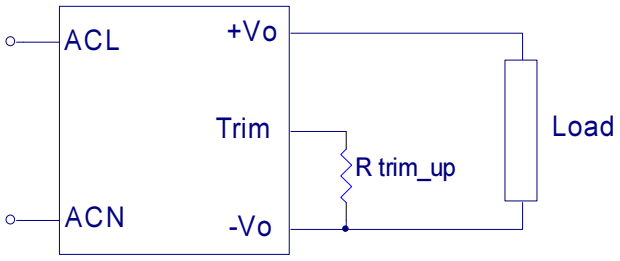


Trim-up Voltage Setup

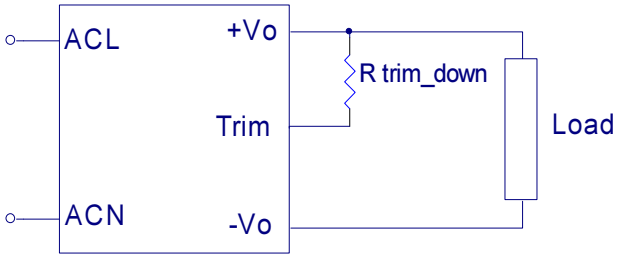


Trim-down Voltage Setup

**The value of $R_{trim_up}$ defined as:**

$$R_{trim_up} = \left[\frac{(R3 \times Vr \times \frac{(R1+R2)}{R1})}{(Vout - \left(Vr \times \frac{(R1+R2)}{R1}\right) - \left(\frac{(Vr \times R3)}{R1}\right))}\right] - Rt(K\Omega)$$

Where:

$R_{trim_up}$ is the external resistor in KΩ.

$V_{o,\ nom}$ is the nominal output voltage.

$V_o$ is the desired output voltage.

R1, R2, R3, Rt and Vr are internal to the unit and are defined in Table 1.

Table 1 – Trim up and Trim down Resistor Values

| Model Number | Output Voltage(V) | R1 (KΩ) | R2 (KΩ) | R3 (KΩ) | Rt (KΩ) | Vr (V) |
|---|---|---|---|---|---|---|
| CBM70S120 | 12.0 | 6.82 | 10 | 16 | 51 | 2.5 |
| CBM70S240 | 24.0 | 6.82 | 22.6 | 36.33 | 130 | 2.5 |
| CBM70S360 | 36.0 | 6.82 | 39 | 52.81 | 200 | 2.5 |
| CBM70S480 | 48.0 | 6.82 | 56 | 68.51 | 240 | 2.5 |

For example, to trim-up the output voltage of 12V module (CBM70SS120) by 10% to 13.2V, $R_{trim_up}$ is calculated as follows:

R1=6.82KΩ, R2=10KΩ, R3=16KΩ, Rt=51KΩ, Vr=2.5V, Vo=13.2V, Vo, nom=12V

$$R_{trim_{up}} = \left[\frac{16 \times 2.5 \times ((6.82+10)/6.82)}{13.2 - \left(\frac{2.5X(6.82+10)}{6.82}\right) - \left(\frac{2.5X16}{6.82}\right)}\right] - 51$$

$$= 33.3742\ (K\Omega)$$

**Because R1, R2, R3 round off to the 2nd decimal place. $R_{trim_up}$& $R_{trim_down}$ have error value.**

**The typical value of $R_{trim_up}$**

| Trim up (%) | 12V | 24V | 36V | 48V |
|---|---|---|---|---|
| | $R_{trim_up}$ (KΩ) | | | |
| 1% | 1087.46 | 2831.31 | 4318.89 | 4595.59 |
| 2% | 426.42 | 922.50 | 1394.74 | 1717.02 |
| 3% | 251.04 | 509.98 | 768.22 | 986.75 |
| 4% | 169.90 | 329.77 | 495.12 | 653.38 |
| 5% | 123.12 | 228.75 | 342.19 | 462.48 |
| 6% | 92.69 | 164.13 | 244.42 | 338.80 |
| 7% | 71.31 | 119.23 | 176.52 | 252.16 |
| 8% | 55.47 | 86.23 | 126.62 | 188.07 |
| 9% | 43.27 | 60.94 | 88.40 | 138.75 |
| 10% | 33.57 | 40.95 | 58.18 | 99.63 |

**The value of $R_{trim_down}$ defined as:**

$$R_{trim_{down}} = \left[\frac{(Vout - Vr \times \frac{R1+R2}{R1}) \times R3}{((\frac{Vr \times R3}{R1}) - \left(Vout - Vr \times \frac{(R1+R2)}{R1}\right))}\right] - Rt(K\Omega)$$

Where:

$R_{trim_down}$ is the external resistor in KΩ.

$V_{o,\ nom}$ is the nominal output voltage.

$V_o$ is the desired output voltage.

R1, R2, R3, Rt and Vr are internal to the unit and are defined in Table 1.

For example: to trim-down the output voltage of 12V module (CBM70S120) by 10% to 10.8V, $R_{trim_down}$ is calculated as follows:

R1=6.82KΩ, R2=10KΩ, R3=16KΩ, Rt=51KΩ, Vr=2.5V, Vo=10.8V, Vo, nom=12V

$$R_{trim_{down}} = \left(10.8 - 2.5 * \frac{6.82+10}{6.82}\right) * 16/(2.5 * \frac{16}{6.82} - \left(10.8 - 2.5 * \frac{6.82+10}{6.82}\right)) - 51$$

$$= 9.24\ (K\Omega)$$

**The typical value of $R_{trim_down}$**

| Trim down (%) | 12V | 24V | 36V | 48V |
|---|---|---|---|---|
| | $R_{trim_down}$ (KΩ) | | | |
| 1% | 545.17 | 1225.67 | 1699.95 | 2407.42 |
| 2% | 276.41 | 657.18 | 904.41 | 1236.83 |
| 3% | 171.64 | 418.39 | 569.43 | 771.39 |
| 4% | 115.86 | 286.95 | 384.85 | 521.42 |
| 5% | 81.21 | 203.76 | 267.95 | 365.42 |
| 6% | 57.60 | 146.37 | 187.27 | 258.79 |
| 7% | 40.48 | 104.39 | 128.23 | 181.29 |
| 8% | 27.50 | 72.34 | 83.16 | 122.42 |
| 9% | 17.31 | 47.08 | 47.63 | 76.18 |
| 10% | 9.11 | 26.66 | 18.89 | 38.91 |

# 7. Input / Output Considerations

## 7.1 Output Ripple and Noise Measurement

The test set-up for noise and ripple measurements is shown in Figure 2 Measured method:

Add a C2=0.1uF ceramic capacitor and a C1=10uF electrolytic capacitor to output at 20 MHz bandwidth.

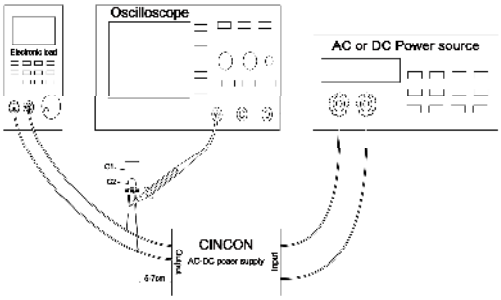


Figure 2. Output Voltage Ripple and Noise Measurement Set-Up

# 8. Thermal Design

## *8.1 Operating Temperature Range*

The highly efficient design of Cincon's CBM70S series power modules has resulted in their ability to operate within ambient temperature environments from -40℃ to +85℃. Due consideration must be given to the de-rating curves when ascertaining the maximum power that can be drawn from the module. The maximum power which can be drawn is influenced by a number of factors, such as:

- Input voltage range
- Permissible output load (per derating curve)
- Forced air or natural convection
- Heat sink (optional)

## *8.2 Convection Requirements for Cooling*

To predict the approximate cooling needed for the half brick module, refer to the power derating curves in **section 7.4**. These derating curves are approximations of the ambient temperatures and airflows required to keep the power module temperature below its maximum rating. Once the module is assembled in the actual system, the module's temperature should be monitored to ensure it does not exceed 85℃ as measured at the center of the top of the case (thus verifying proper cooling).

## *8.3 Thermal Considerations*

The power module operates in a variety of thermal environments; however, sufficient cooling should be provided to help ensure reliable operation of the unit. Heat is removed by conduction, convection, and radiation to the surrounding environment. The example is presented in **section 7.4**. The power output of the module should not be allowed to exceed rated power ($V_{o_set}$ x $I_{o_max}$).

## *8.4 Power Derating*

The operating case temperature range of CBM70S series is -40℃ to +85℃. When operating the CBM70S series, proper derating or cooling is needed. (at 115Vac & 230Vac)
The maximum case temperature under any operating condition should not exceed 85℃.
The following curve is the derating curve of CBM70S series without heatsink.

**Note: Pd is calculated after 1 minute of burn-in**

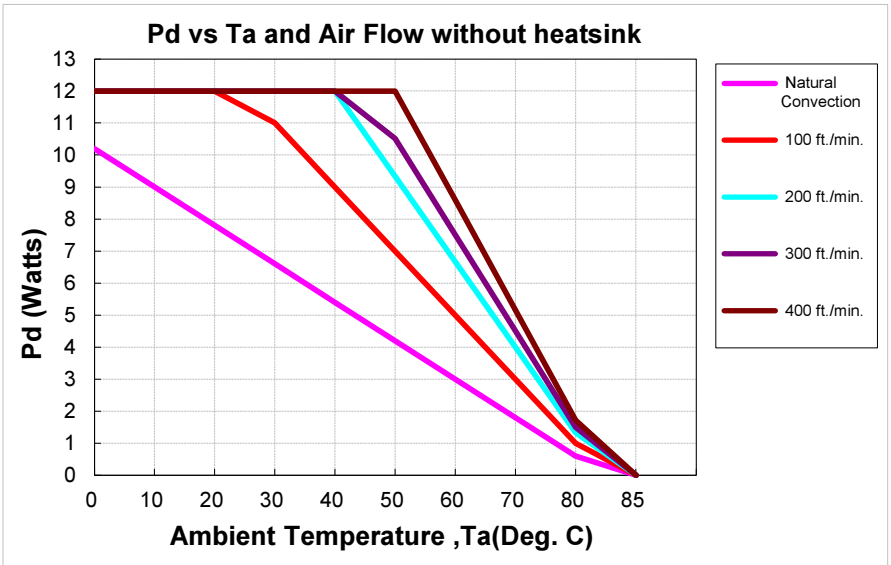


| AIR FLOW RATE | TYPICAL $R_{ca}$ |
|---|---|
| Natural Convection | 8.33℃/W |
| 100 ft./min. (0.5m/s) | 5.0℃/W |
| 200 ft./min. (1.0m/s) | 3.75℃/W |
| 300 ft./min. (1.5m/s) | 3.33℃/W |
| 400 ft./min. (2.0m/s) | 2.91℃/W |

**Example without heatsink:**

What is the minimum airflow necessary for a CBM70S120 operating at 230Vac, an output current of 5.83A, and a maximum ambient temperature of 35℃ without heatsink?

**Solution:**

**Given:** $V_{in}$=230Vac, $V_o$=12$V_{dc}$, $I_o$=5.83A

**Determine Power dissipation ($P_d$):** $P_d$= $P_i$-$P_o$= $P_o$(1-η)/η, $P_d$= 12V×5.83A×(1-0.88)/0.88=9.54Watts

**Determine airflow:** Given: $P_d$= 9.54W and $T_a$= 35℃

**Check *Power Derating* curve:** Minimum airflow= 100 ft./min.

**Verify:**

Maximum temperature rise is ΔT= $P_d$ × $R_{ca}$ = 9.54×5= 47.7℃

Maximum case temperature is $T_c$ = $T_a$ +ΔT= 82.7°C<85℃

**Where:**

The $R_{ca}$ is thermal resistance from case to ambient environment.

$T_a$ is ambient temperature and $T_c$ is case temperature.

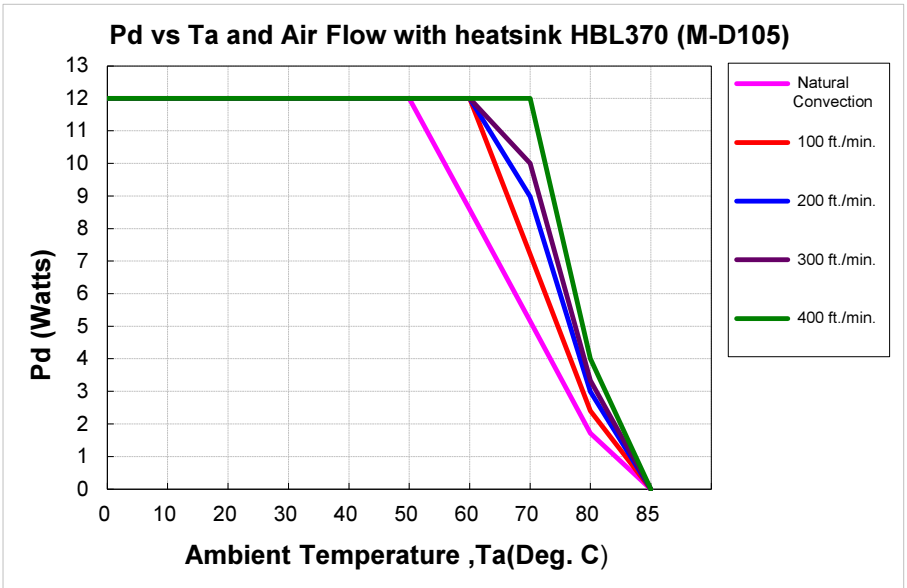


| AIR FLOW RATE | TYPICAL $R_{ca}$ |
|---|---|
| Natural Convection | 2.91℃/W |
| 100 ft./min. (0.5m/s) | 2.08℃/W |
| 200 ft./min. (1.0m/s) | 1.67℃/W |
| 300 ft./min. (1.5m/s) | 1.50℃/W |
| 400 ft./min. (2.0m/s) | 1.25℃/W |

**Example with heatsink** HBL370 (M-D105)**:**

What is the minimum airflow necessary for a CBM70S120 operating at 230Vac, an output current of 5A, and a maximum ambient temperature of 60℃ with heatsink HBL370 (M-D105).

**Solution:**

**Given:** $V_{in}$=230Vac, $V_o$=12$V_{dc}$, $I_o$=5A

**Determine Power dissipation ($P_d$):** $P_d$= Pi-Po= Po(1-η)/η, $P_d$= 12V×5A×(1-0.88)/0.88=8.18Watts

**Determine airflow:** Given: $P_d$= 8.18W and $T_a$ = 60℃

**Check above Power de-rating curve:** Minimum airflow= Natural Convection

**Verify:**

Maximum temperature rise is ΔT= $P_d$ × $R_{ca}$= 8.18×2.91= 23.8℃

Maximum case temperature is $T_c$= $T_a$ +ΔT= 83.8℃<85℃

**Where:**

The $R_{ca}$ is thermal resistance from case to ambient environment.

$T_a$ is ambient temperature and $T_c$ is case temperature.

### *8.5 Half Brick Heat Sinks*

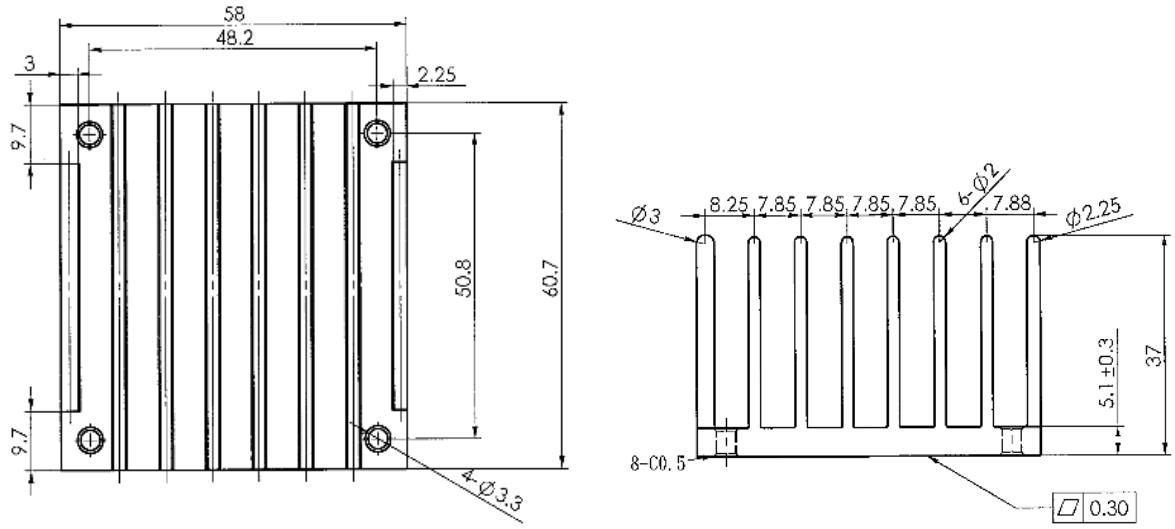


All Dimensions in mm
HBL370 (M-D105) Heat Sink G6620710201 60.7*58*37mm
Rca: 2.91°C/W (typ.), At natural convection
2.08°C/W (typ.), At 100LFM
1.67°C/W (typ.), At 200LFM
1.50°C/W (typ.), At 300LFM
1.25°C/W (typ.), At 400LFM

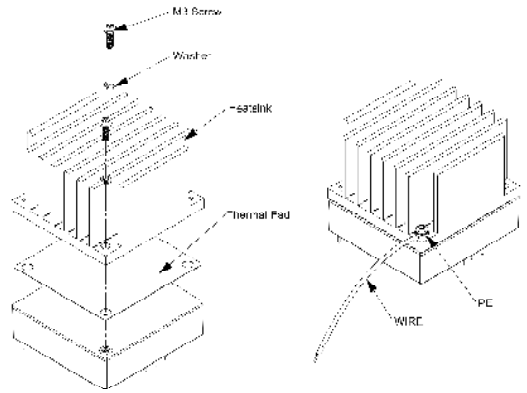


Heat Sink HBL370 (M-D105): 60.7*58*37mm (G6620710201)
Thermal Pad: 56.9*60*0.25mm(G6135041091)
Screw: K310W SMP+WS M3*0.5 10mm (G75A1300332)

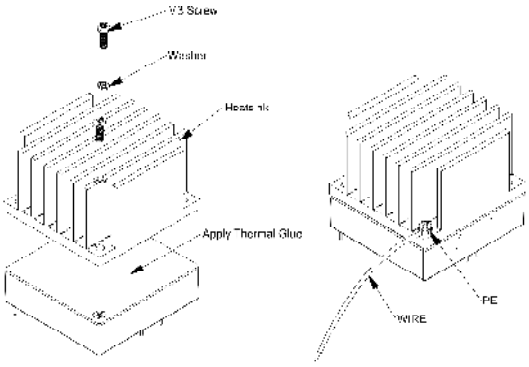


Heat Sink HBL370 (M-D105): 60.7*58*37mm (G6620710201)
Thermal Glue: Thermal Conductivity 3.5W/(m*K)
Screw: K310W SMP+WS M3*0.5 10mm (G75A1300332)

## 9. Packing Information

The packing information for CBM70S series is showing as follows:

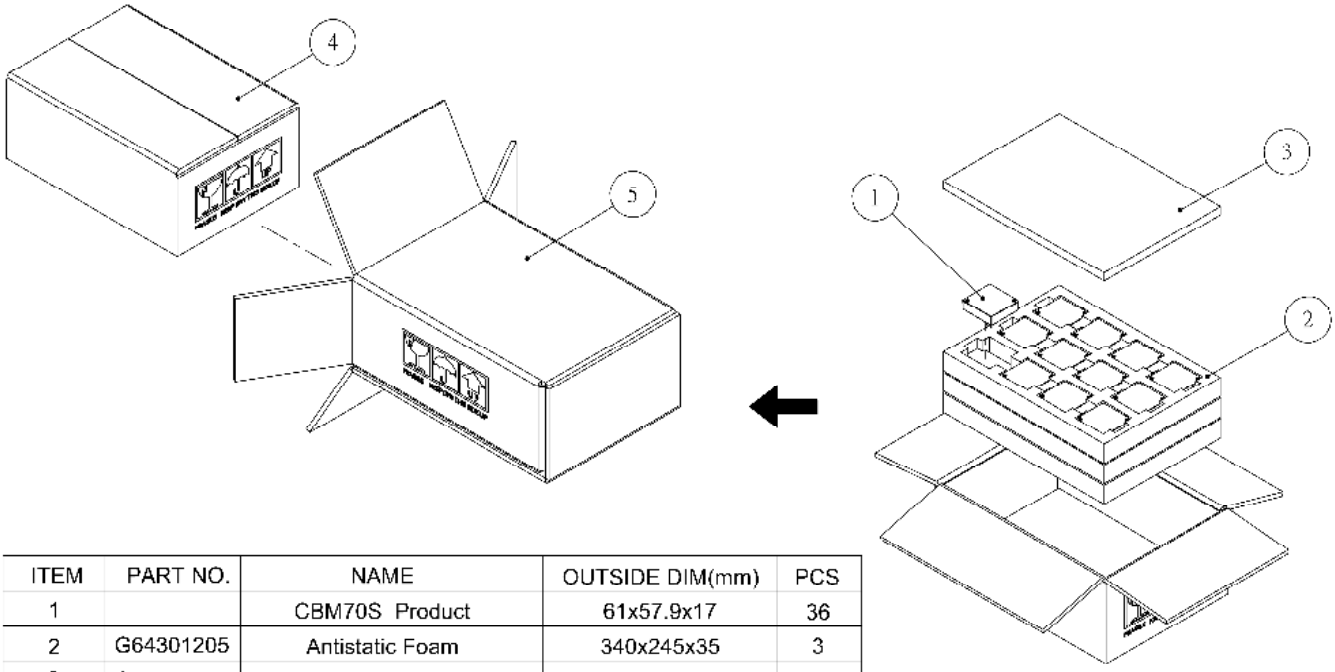


| ITEM | PART NO. | NAME | OUTSIDE DIM(mm) | PCS |
|---|---|---|---|---|
| 1 | | CBM70S Product | 61x57.9x17 | 36 |
| 2 | G64301205 | Antistatic Foam | 340x245x35 | 3 |
| 3 | G64308319 | Antistatic Foam | 340x245x15 | 2 |
| 4 | G64112339 | No.59 Cardboard Box | 360.6x257.6x148.5 | 1 |
| 5 | G64112270 | No.95 Cardboard Box | 390.9x284.8x175.7 | 1 |

Each Box Packaging 36 PCS Products
Net weight Ref. 4.9 Kg
Gross weight Ref. 6.1 Kg

CBM70S 36 PCS a box, including the total weight of package material about 6.1Kg

**CINCON ELECTRONICS CO., LTD.**

**Headquarters:**

14F, No.306, Sec.4, Hsin Yi Rd.
Taipei, Taiwan
Tel: 886-2-27086210
Fax: 886-2-27029852
E-mail: support@cincon.com.tw
Web Site: http://www.cincon.com

**Factory:**

No. 8-1, Fu Kung Rd.
Fu Hsing Industrial Park
Fu Hsing Hsiang,
ChangHua Hsien, Taiwan
Tel: 886-4-7690261
Fax: 886-4-7698031

**Cincon North America:**

1655Mesa Verde Ave. Ste 180
Ventura, CA93003
Tel: 805-639-3350
Fax: 805-639-4101
E-mail: info@cincon.com